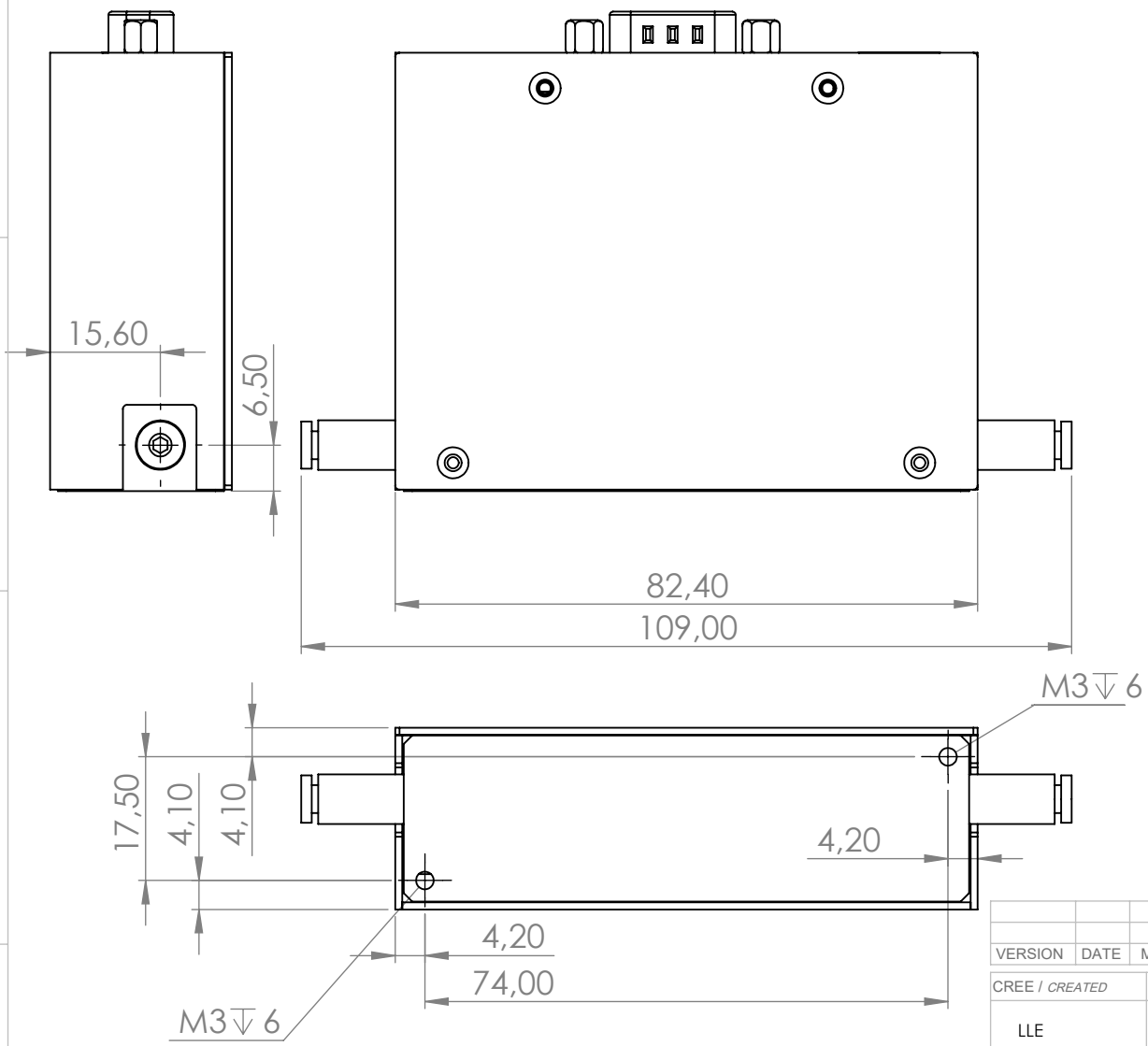


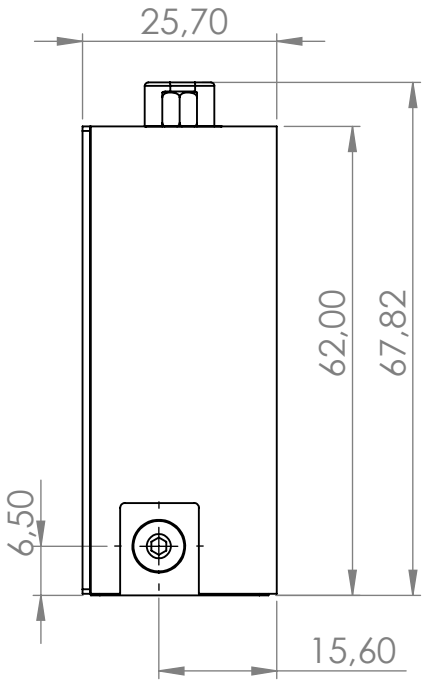


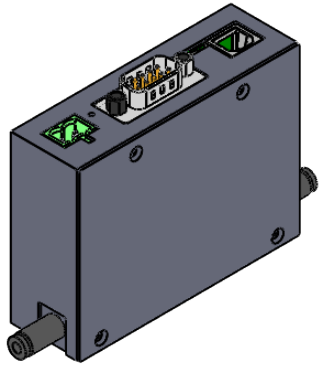

| VERSION | DATE | MODIFIE / *MODIFIED BY* | OBJET |
|---|---|---|---|
| | | | |

| CREE / *CREATED* | DATE | ECHELLE | TITRE / *TITLE* | | |
|---|---|---|---|---|---|
| LLE | 11/02/2019 | 1:1 | PX series with speedfit / overall dimensions | | |
| APPROUVE / *APPROV.* | DATE | SYSTEME | MATERIAU / *MATERIAL* | FINITION / *FINISH* | COULEUR / *COLOR* |
| Prénom Nom | | | | | |

O'kabé bureaux, 67 avenue de Fontainebleau
94270 Le Kremlin-Bicêtre | France

FLUIGENT
SMART MICROFLUIDICS™

TOLERANCES / *TOLERANCES*
+/- 1 mm

| FORMAT | LANGUE | PROPRIETE | | PAGE |
|---|---|---|---|---|
| A4 | | All proprietary rights reserved by Fluigent. Unauthorized reproduction will be legally pursued. | | 1/1 |